GYPSEMNA

SLOTTED WEB CLEAT

FIXING COMPONENTS

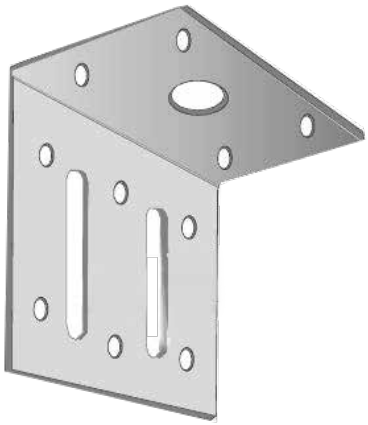

DESCRIPTION

The Slotted Web Cleat is typically used to transfer loads in external wall situations where a deflection allowance is needed. It is required as the higher external wall pressures would cause a standard stud-to-track connection to be overloaded.

BASIC USES

The Slotted Web Cleat is applicable for partition system.

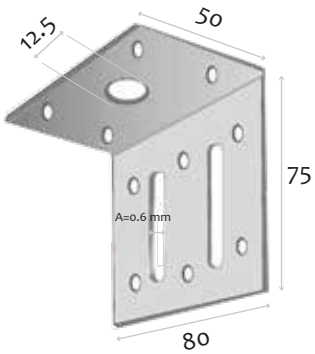

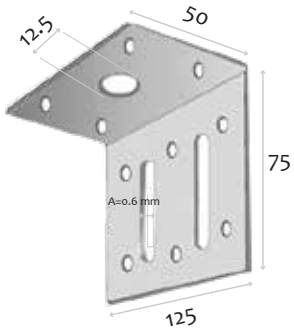

TECHNICAL DATA

PHYSICAL PROPERTIES

Coating	Z180 Zinc-Aluminium Alloy
Standard compliance	ASTM A653/A653M
Material	Galvanized steel
Steel grade	G2
Minimum yield strength	270 MPa minimum
Tensile strength	330 MPa

PERFORMANCE DATA

Part No.	LENGTH (mm)	WIDTH (mm)	HEIGHT (mm)	MASS (kg)
SWC3A	125	50	75	0.4200
SWC3	80	50	75	0.270